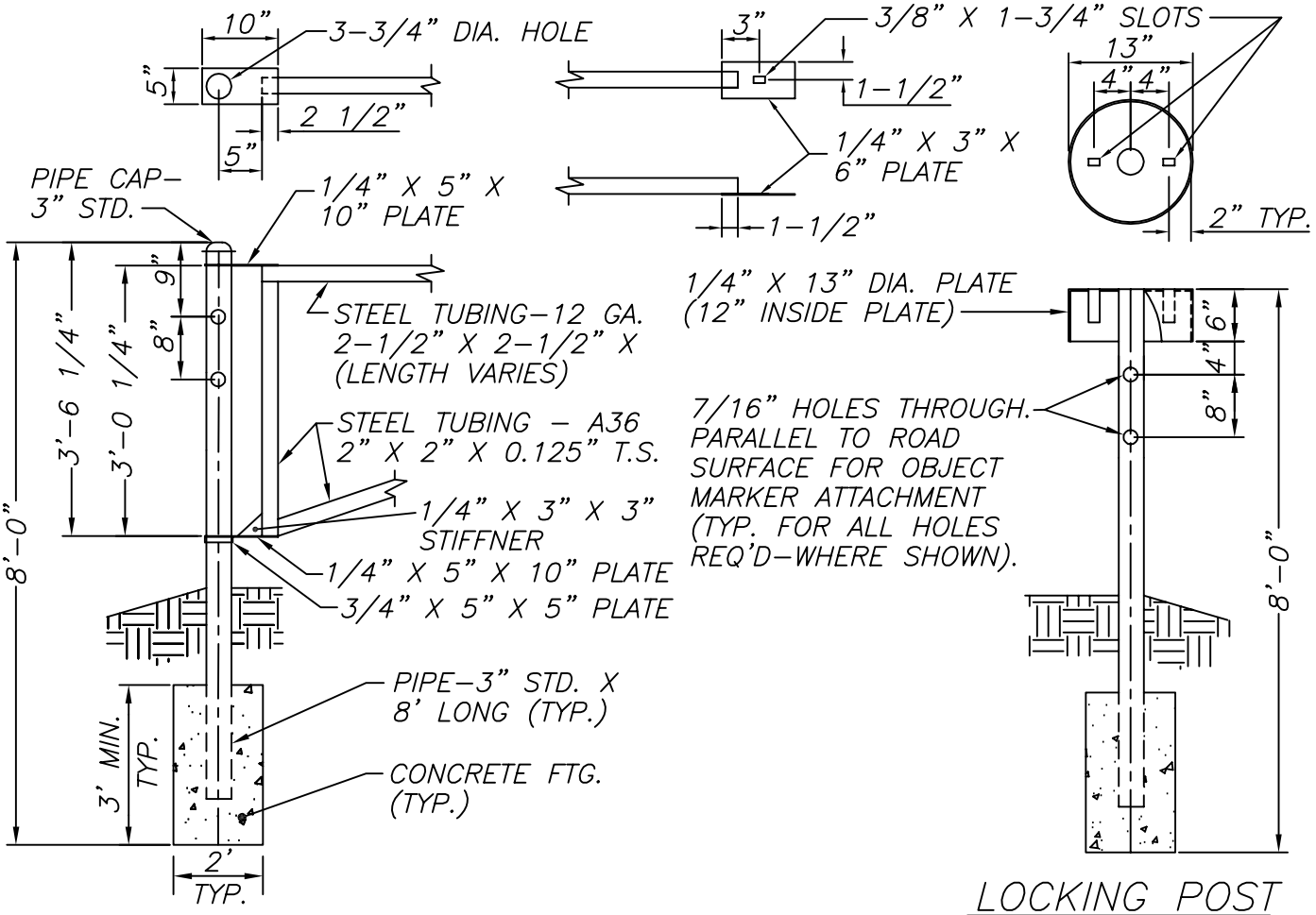

HINGE POST DETAIL

LOCKING POST

PLAN VIEW

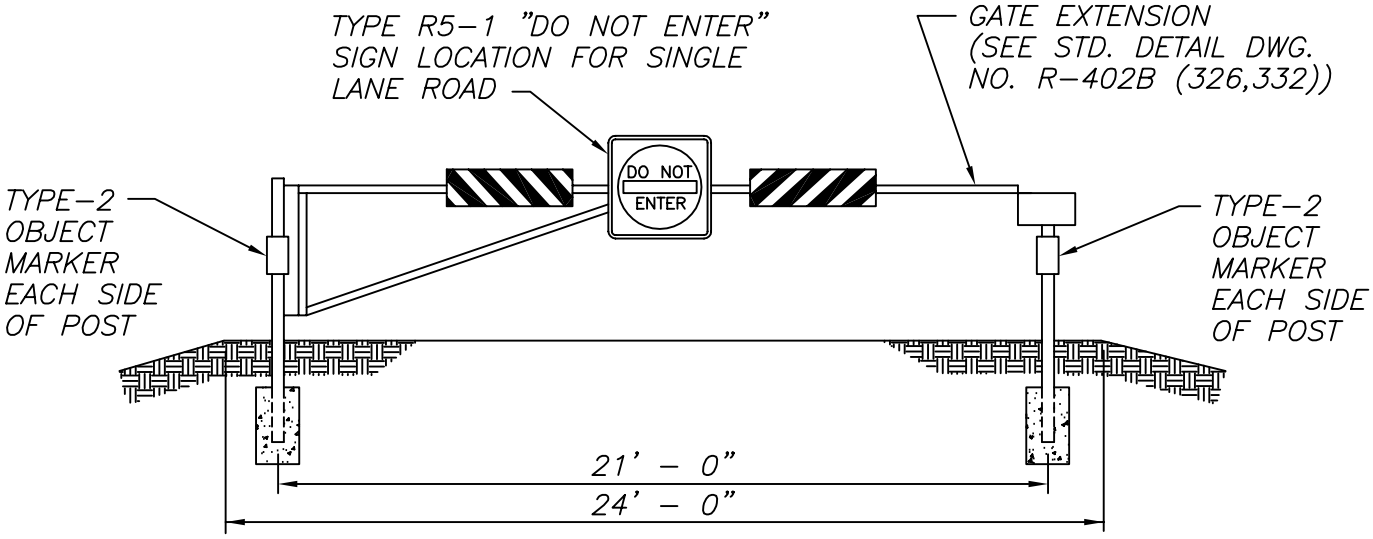

ELEVATION VIEW

NO.	REVISION	DATE	STANDARD DETAILS FOR PUBLIC WORKS CONSTRUCTION	SECTION RENO
1	ADD ROAD WIDTH	01/04	EMERGENCY ACCESS CONTROL GATE	DRAWING NO. R-402A (326,332)
				DATE 08/00 / PAGE 401
APPROVED BY	G.S.	01/04		