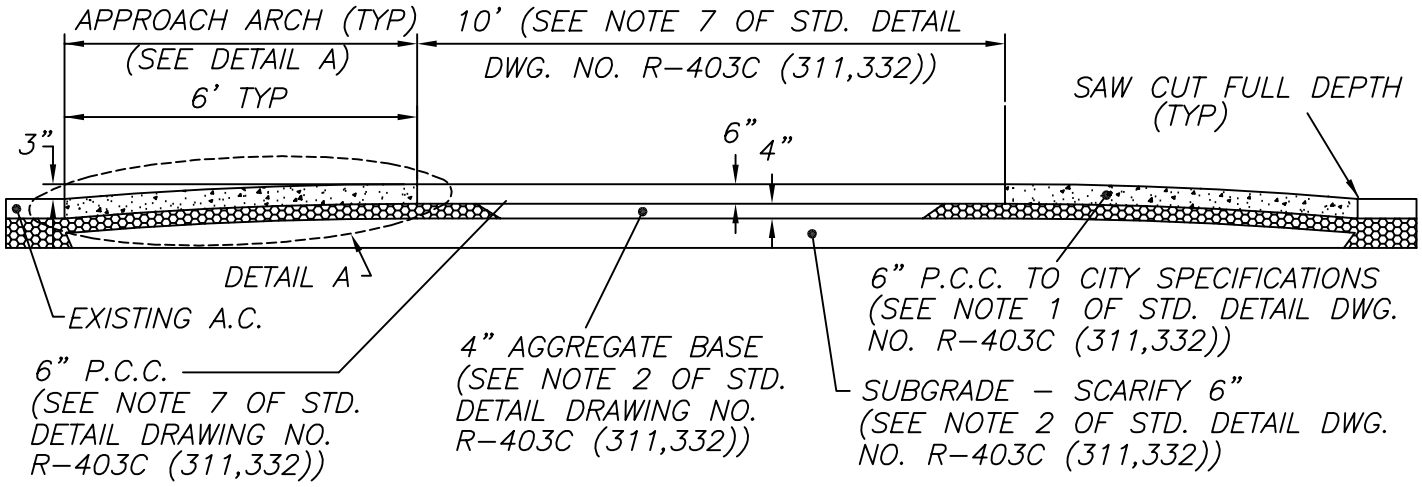

SECTION B-B SPEED HUMP PROFILE

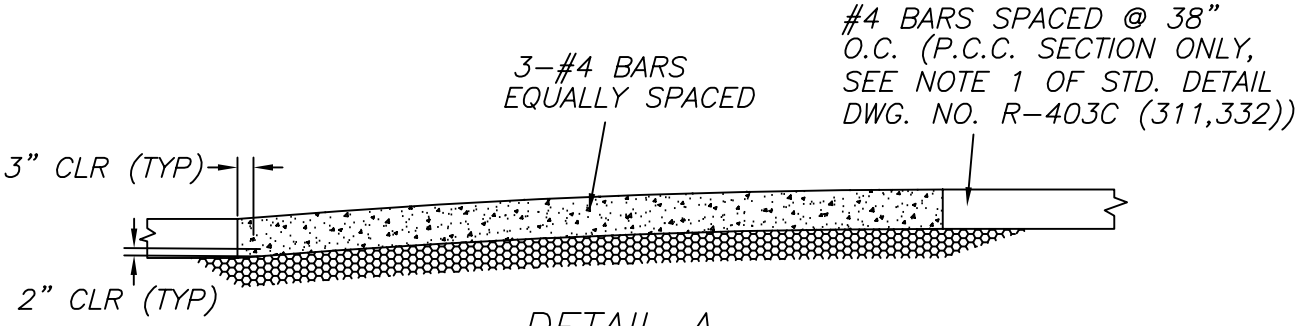

DETAIL A

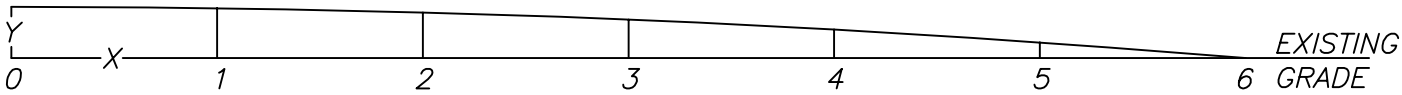

SEE VERTICAL DIMENSIONS CHART

VERTICAL DIMENSIONS CHART *

X(FT.)	Y(FT.)=INCHES
0	0.250=3.00
1	0.243=2.92
2	0.222=2.67
3	0.188=2.25
4	0.139=1.67
5	0.077=0.92
6	0.000=0.00

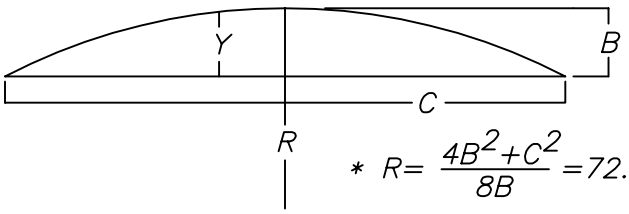

$$* \; R = \frac{4B^2 + C^2}{8B} = 72.125'$$

B=HEIGHT=(0.25')

C=CHORD DISTANCE=(12')

$$Y = (B - R) + \sqrt{R^2 - X^2}$$

APPROACH ARC DETAIL

NO.	REVISION	DATE	STANDARD DETAILS FOR PUBLIC WORKS CONSTRUCTION	SECTION RENO
			SPEED HUMP	DRAWING NO. R-403B (311,332)
				DATE 08/00 / PAGE 405
APPROVED BY: S.V.		08/00		