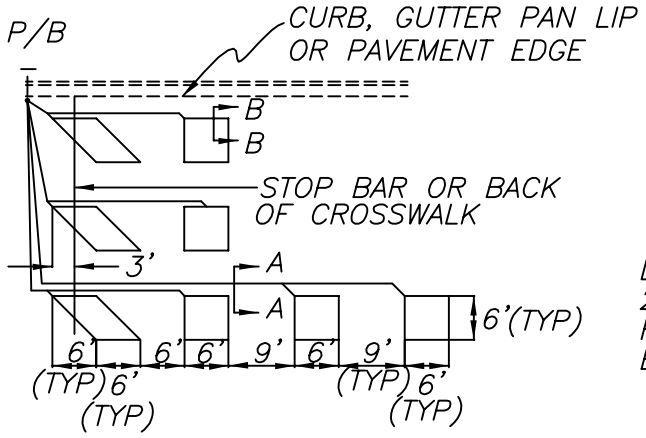

PLAN VIEW

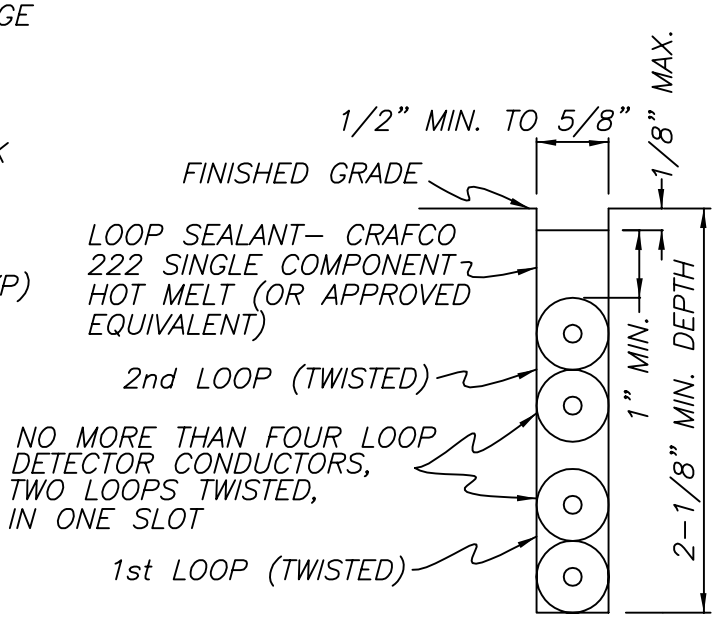

SECTION A–A

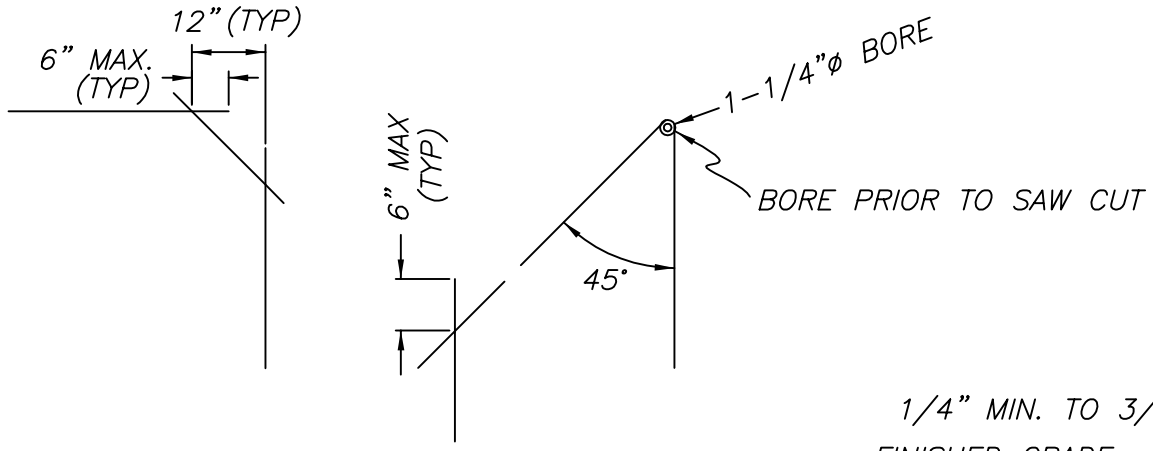

PLAN VIEW

DIAGONAL SLOT AT CORNERS

& 1–1/4"ø BORE

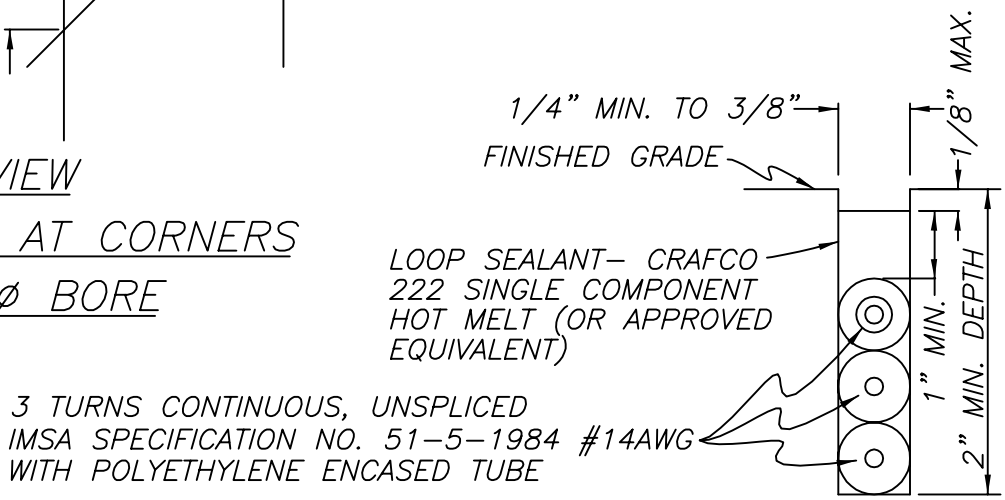

SECTION B–B

NO.	REVISION	DATE	STANDARD DETAILS FOR PUBLIC WORKS CONSTRUCTION	SECTION RENO	
			LOOP DETECTOR LAYOUT AND DETAILS	DRAWING NO. R–406A (325)	
				DATE 08/00	PAGE 409
APPROVED BY: S.V.		08/00			