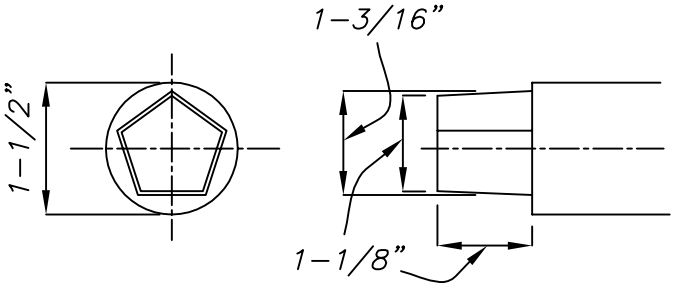


OPERATING NUT – PENTAGON

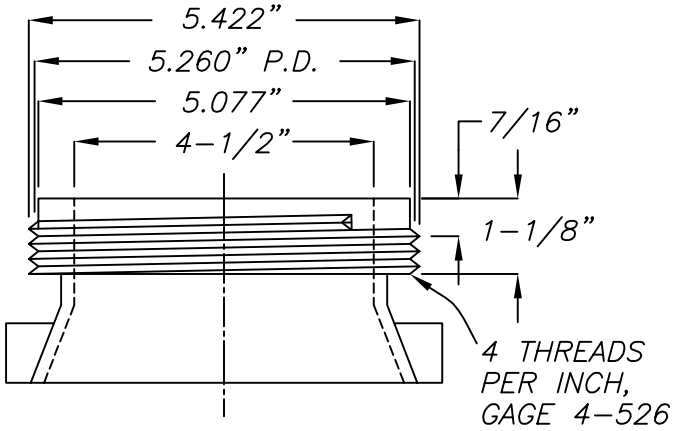


4-1/2" STREAMER NOZZLE

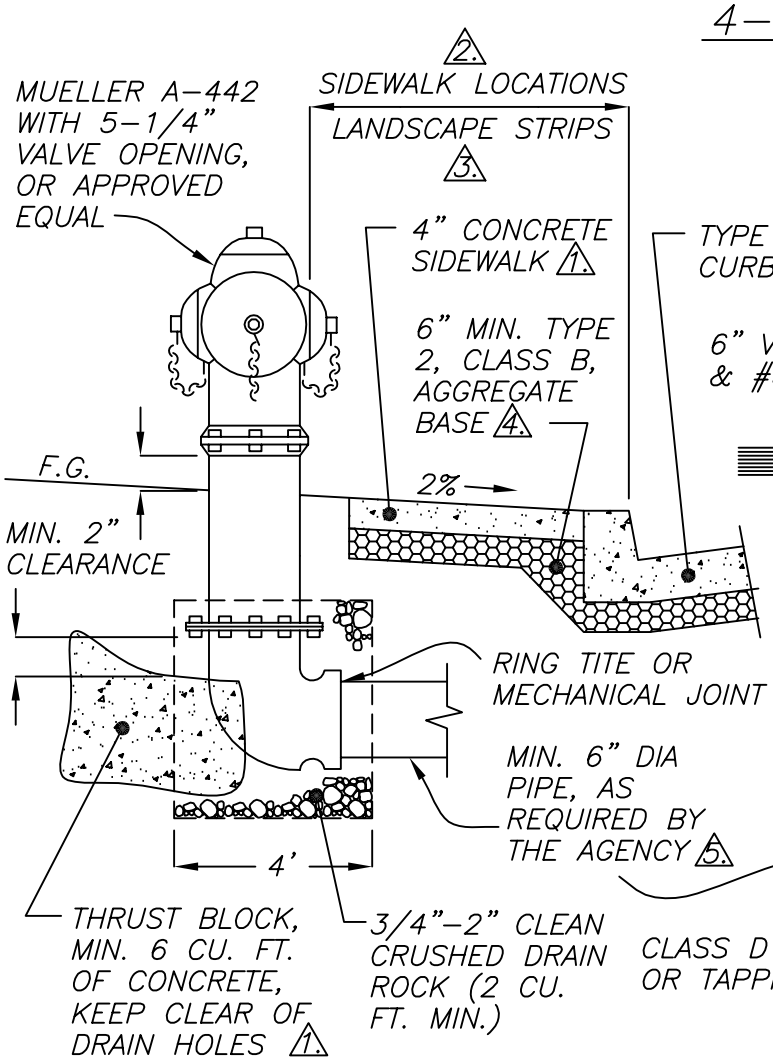


ELEVATION

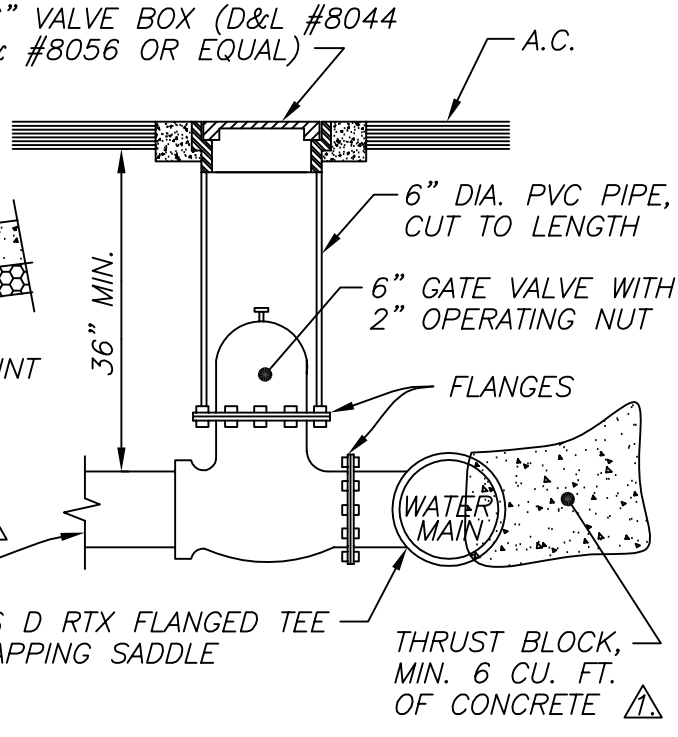


OPERATING VALVE

| NO. | REVISION | DATE | STANDARD DETAILS FOR PUBLIC WORKS CONSTRUCTION | SECTION RENO |
|---|---|---|---|---|
| | | | FIRE HYDRANT | DRAWING NO. R-301A (217,307) |
| | | | | DATE 08/00 / PAGE 300 |
| APPROVED BY: S.V. | | 08/00 | | |