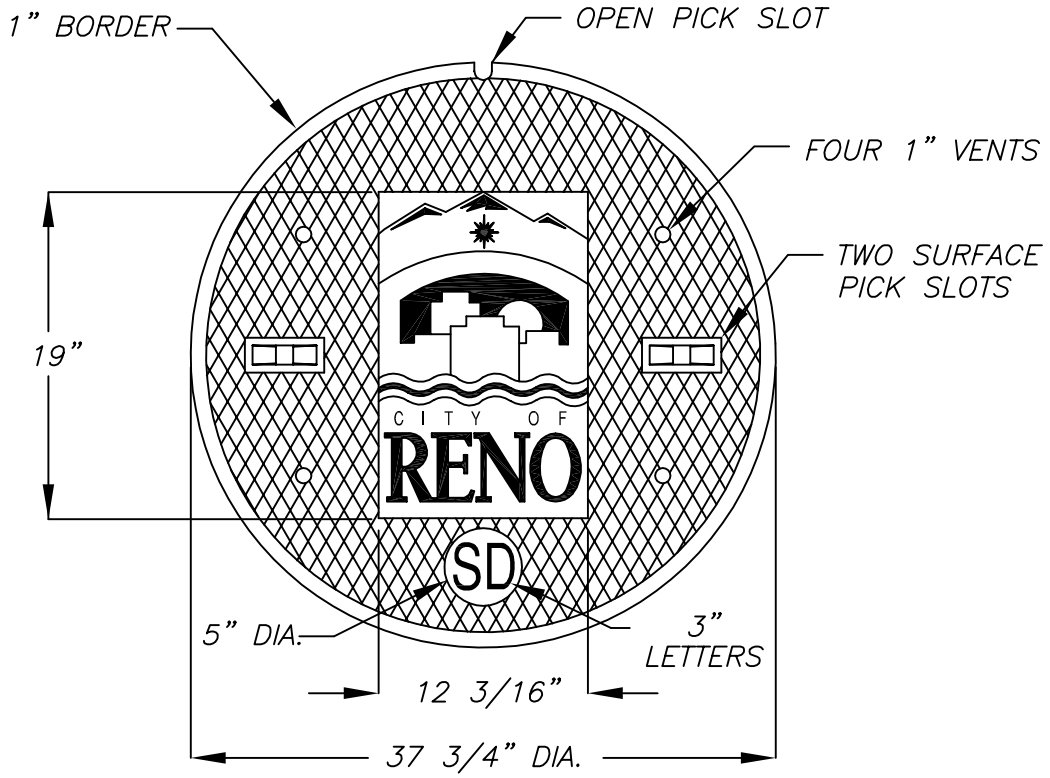

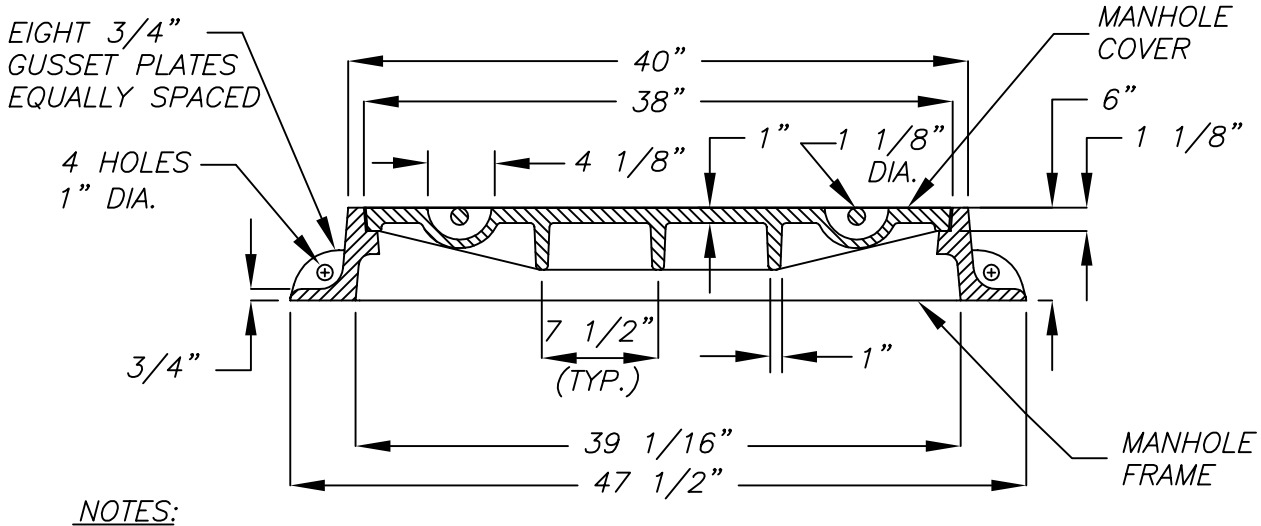

NOTES:

1. SPECIAL CIRCUMSTANCES MAY REQUIRE THE NEED FOR WATERTIGHT FRAMES, GASKETED OR BOLTED LIDS, ETC. AS DIRECTED BY THE CITY OF RENO. DETAILED PLANS OF ANY SPECIAL MANHOLE FRAMES AND/OR COVERS MUST BE APPROVED BY THE CITY ENGINEER.

2. DEETER FOUNDRY COVER AND FRAME #9022 OR APPROVED EQUAL.

3. FURNISHED WITH MACHINED HORIZONTAL BEARING SURFACE.

4. CAST GRAY IRON, ASTM-A-48, CLASS 35B, NO PAINT.

NO.	REVISION	DATE	STANDARD DETAILS FOR PUBLIC WORKS CONSTRUCTION	SECTION RENO	
1	LOGO MANHOLE	01/04	36" STORM DRAIN MANHOLE FRAME & COVER	DRAWING NO. R-217 (326)	
				DATE 08/00	PAGE 222
APPROVED BY: G.S.		01/04			