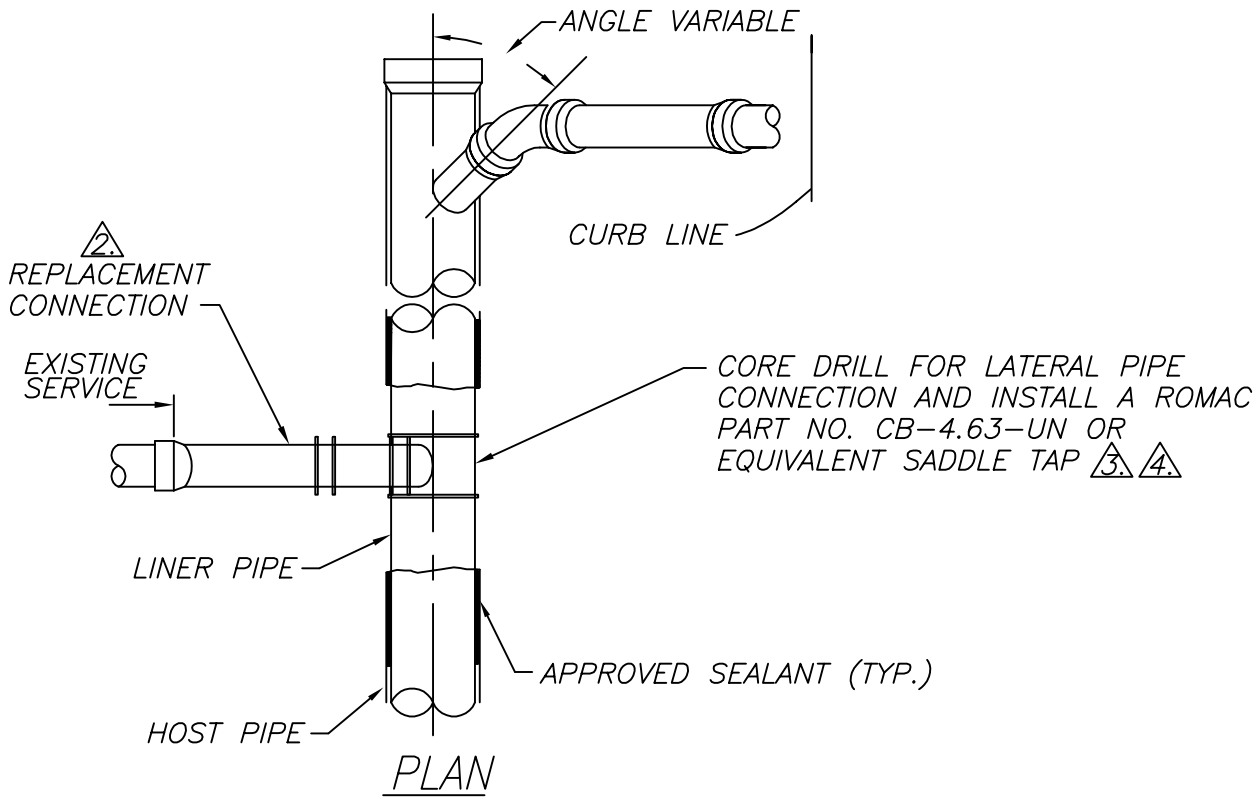

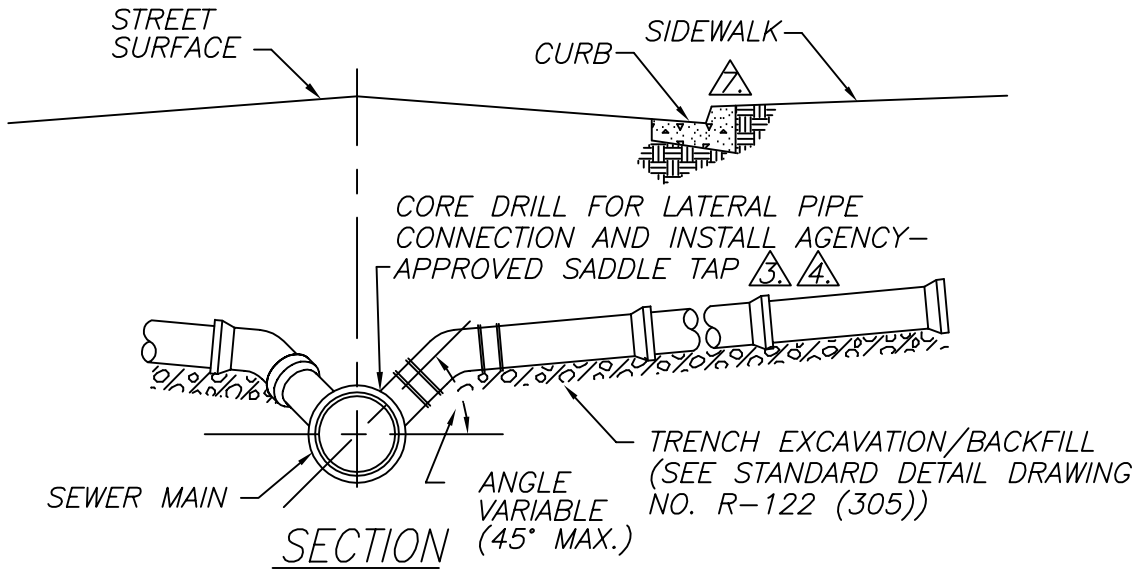

NO.	REVISION	DATE	STANDARD DETAILS FOR PUBLIC WORKS CONSTRUCTION	SECTION RENO	
			LATERAL DETAIL	DRAWING NO. R-224A (306)	
				DATE 01/04	PAGE 229
APPROVED BY: G.S.		01/04			