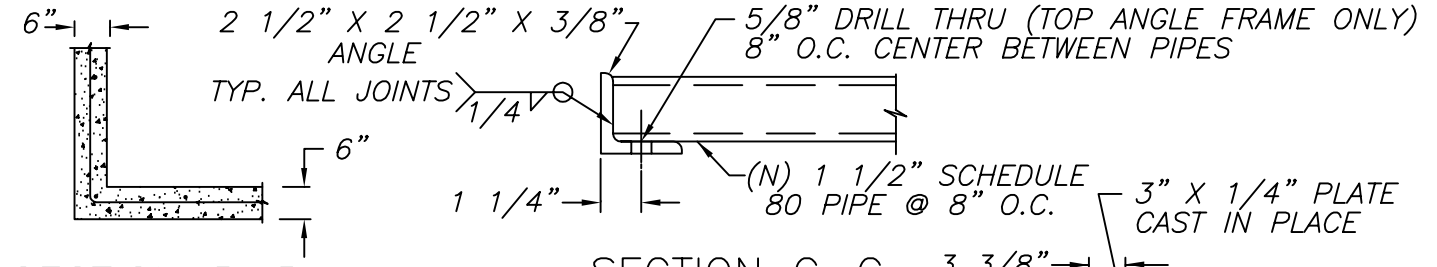

SECTION B–B

SECTION C–C

DETAIL A

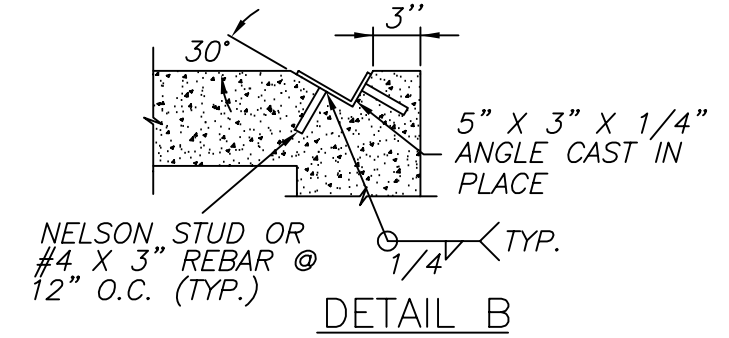

DETAIL B

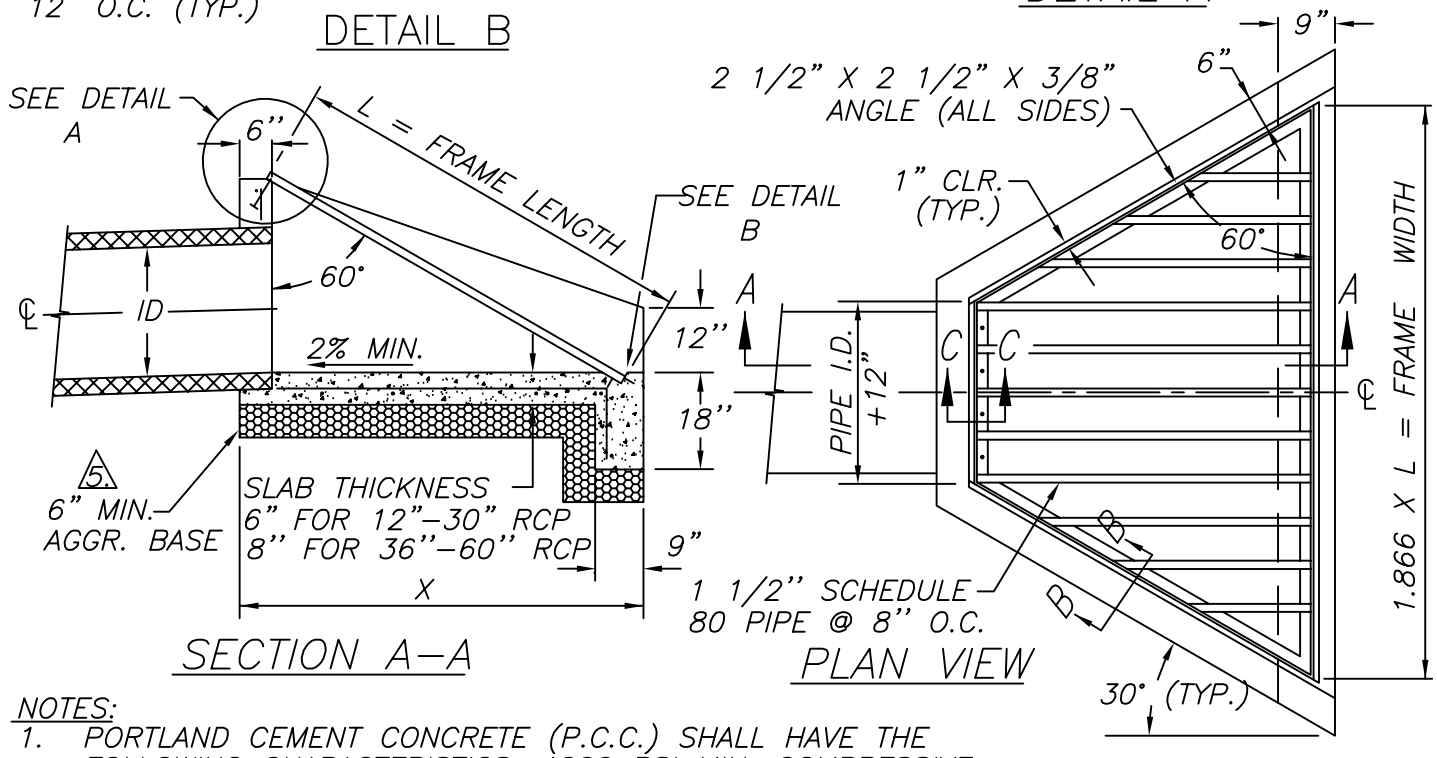

SECTION A–A

PLAN VIEW

NOTES:

1. PORTLAND CEMENT CONCRETE (P.C.C.) SHALL HAVE THE FOLLOWING CHARACTERISTICS: 4000 PSI MIN. COMPRESSIVE STRENGTH AT 28 DAYS, MIN. 6 SACKS OF CEMENT PER CUBIC YARD WITH A MAX. WATER/CEMENT RATIO OF 0.45, AIR ENTRAINMENT 6% ±1.5%, SLUMP AT 1 TO 4 INCHES. ALL MATERIALS SHALL CONFORM TO SSPWC SECTION 202.
2. REINFORCING STEEL SHALL BE NO. 5 @ 12" BW, SET 2" CLEAR OF CONCRETE BOTTOM SURFACE.
3. ALL METAL PARTS SHALL BE GALVANIZED AFTER WELDING.
4. ALL EXPOSED CONCRETE EDGES SHALL BE CHAMFERED 3/4".
5. PLACE A MIN. OF 6" OF TYPE 2, CLASS B AGGREGATE BASE COMPACTED TO A MIN. OF 95% UNDER ALL CONCRETE. 6" OF DRAIN ROCK MAY BE USED FOR BASE MATERIAL.

TABLE

SIZE DIA	X	L	N (EA.)
12"	4'–5"	4'–3"	7
15"	4'–10"	4'–9"	9
18"	5'–3"	5'–3"	9
24"	6'–1.5"	6'–3"	11
30"	7'–0"	7'–3"	15
36"	7'–10.5"	8'–3"	17
42"	8'–9"	9'–3"	19
48"	9'–7"	10'–3"	21
54"	10'–5.5"	11'–3"	23
60"	11'–4"	12'–3"	25

NO.	REVISION	DATE	STANDARD DETAILS FOR PUBLIC WORKS CONSTRUCTION	SECTION RENO
			TRASH RACK FOR 12 TO 60 RCP	DRAWING NO. R-225 (311,326)
				DATE 08/00 / PAGE 231
APPROVED BY: S.V.		08/00		