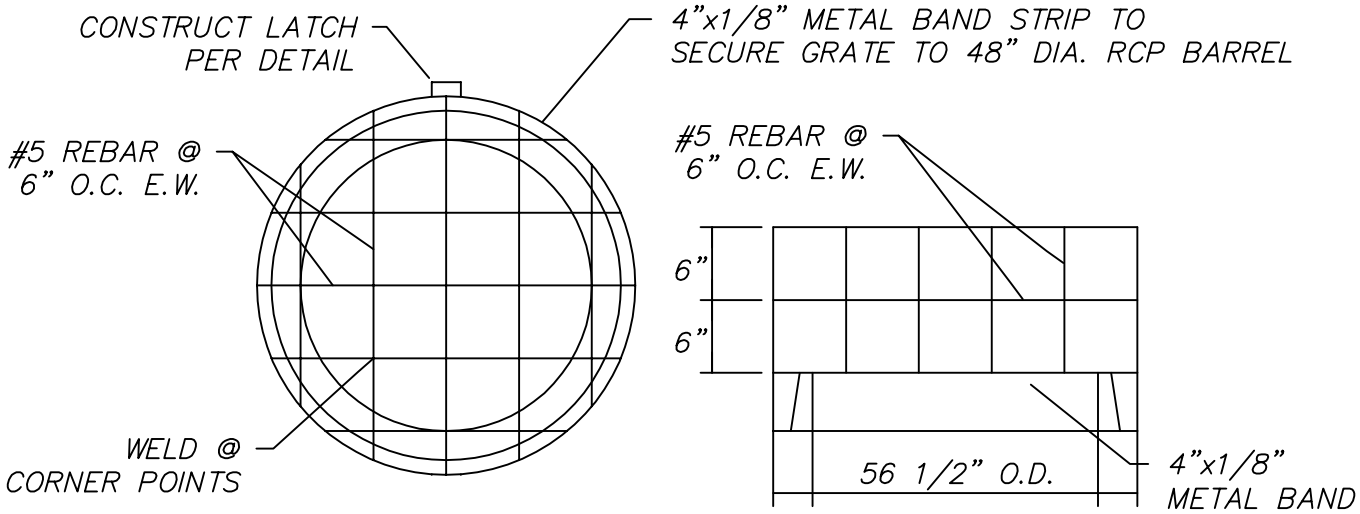

TOP GRATE DETAIL

SECTION VIEW

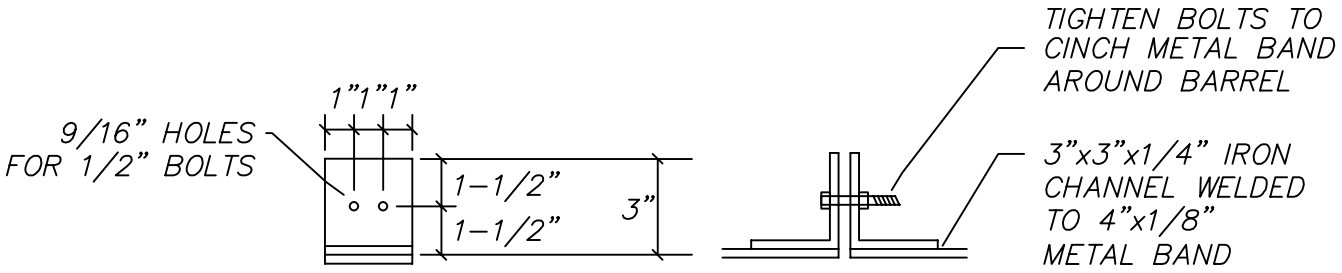

LATCH DETAIL

NO.	REVISION	DATE	STANDARD DETAILS FOR PUBLIC WORKS CONSTRUCTION	SECTION RENO	
			SECONDARY INLET CAGE	DRAWING NO. R-229 (306,326)	
				DATE 01/04	PAGE 235
APPROVED BY: G.S.		01/04			