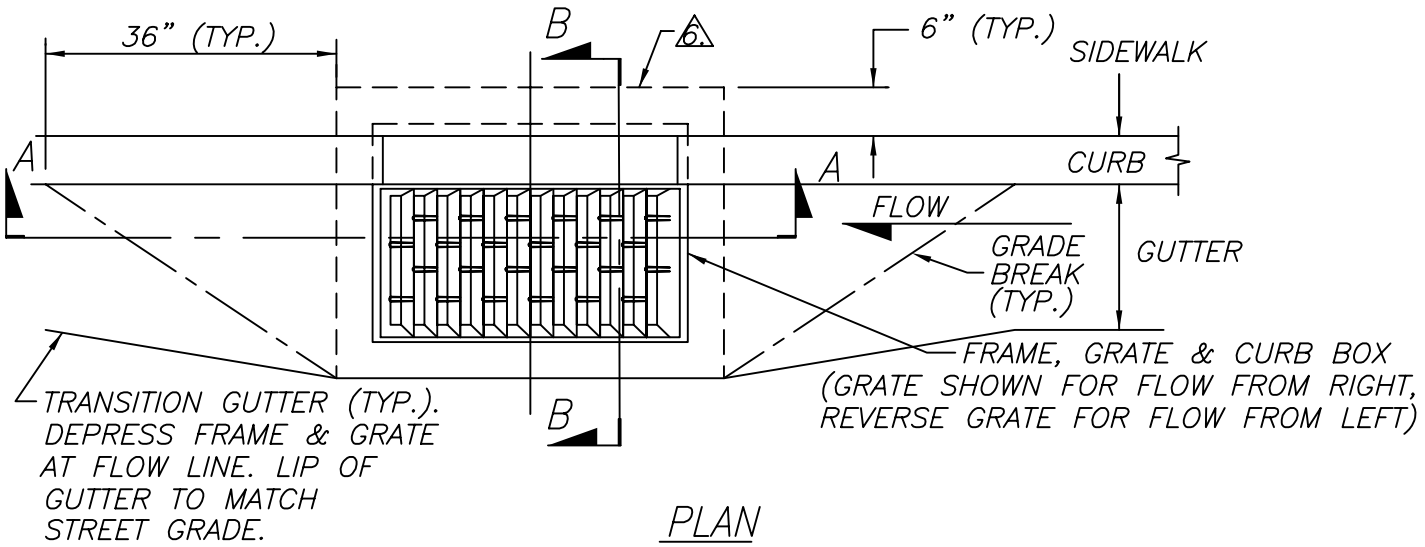

PLAN

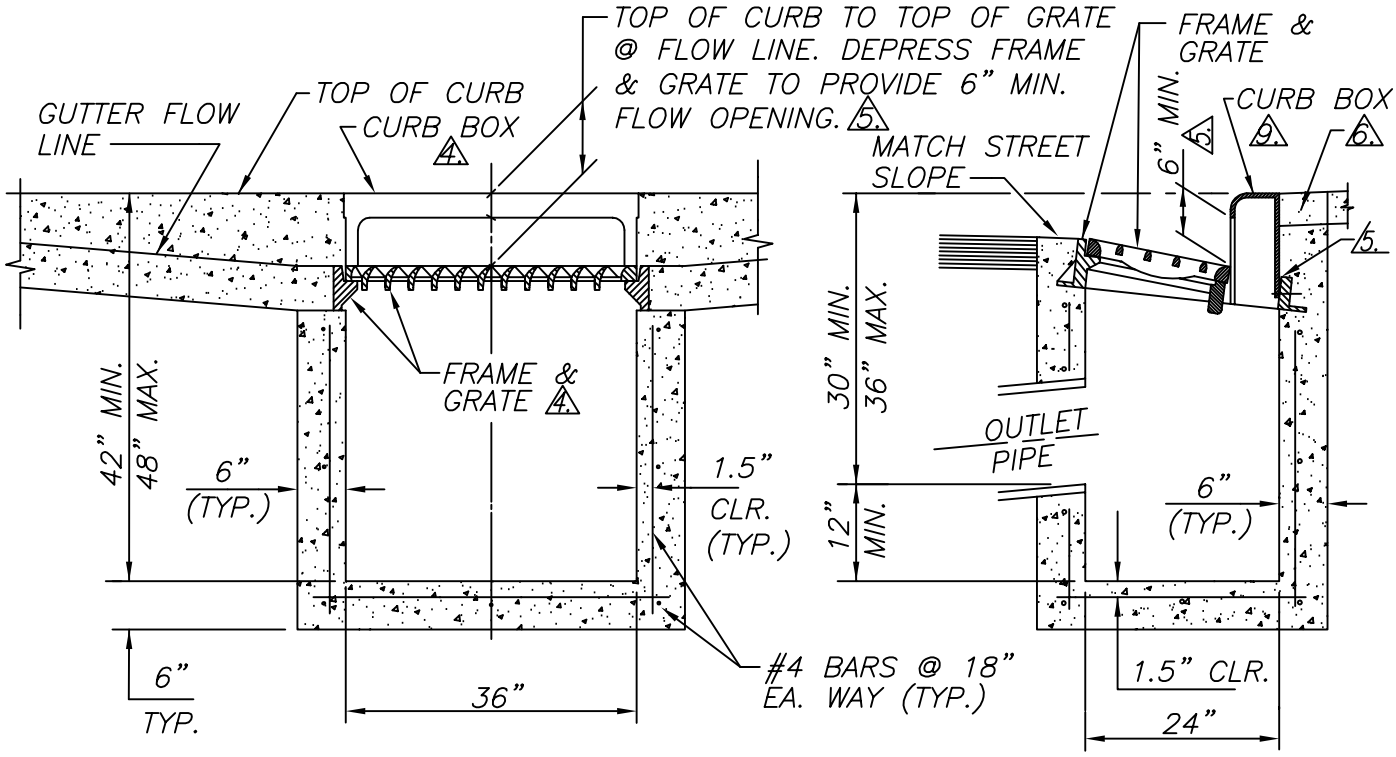

SECTION A–A

SECTION B–B

NO.	REVISION	DATE	STANDARD DETAILS FOR PUBLIC WORKS CONSTRUCTION	SECTION RENO
			CATCH BASIN TYPE 4–R	DRAWING NO. R–206A (311)
				DATE 01/04 / PAGE 205
APPROVED BY: G.S.		01/04		