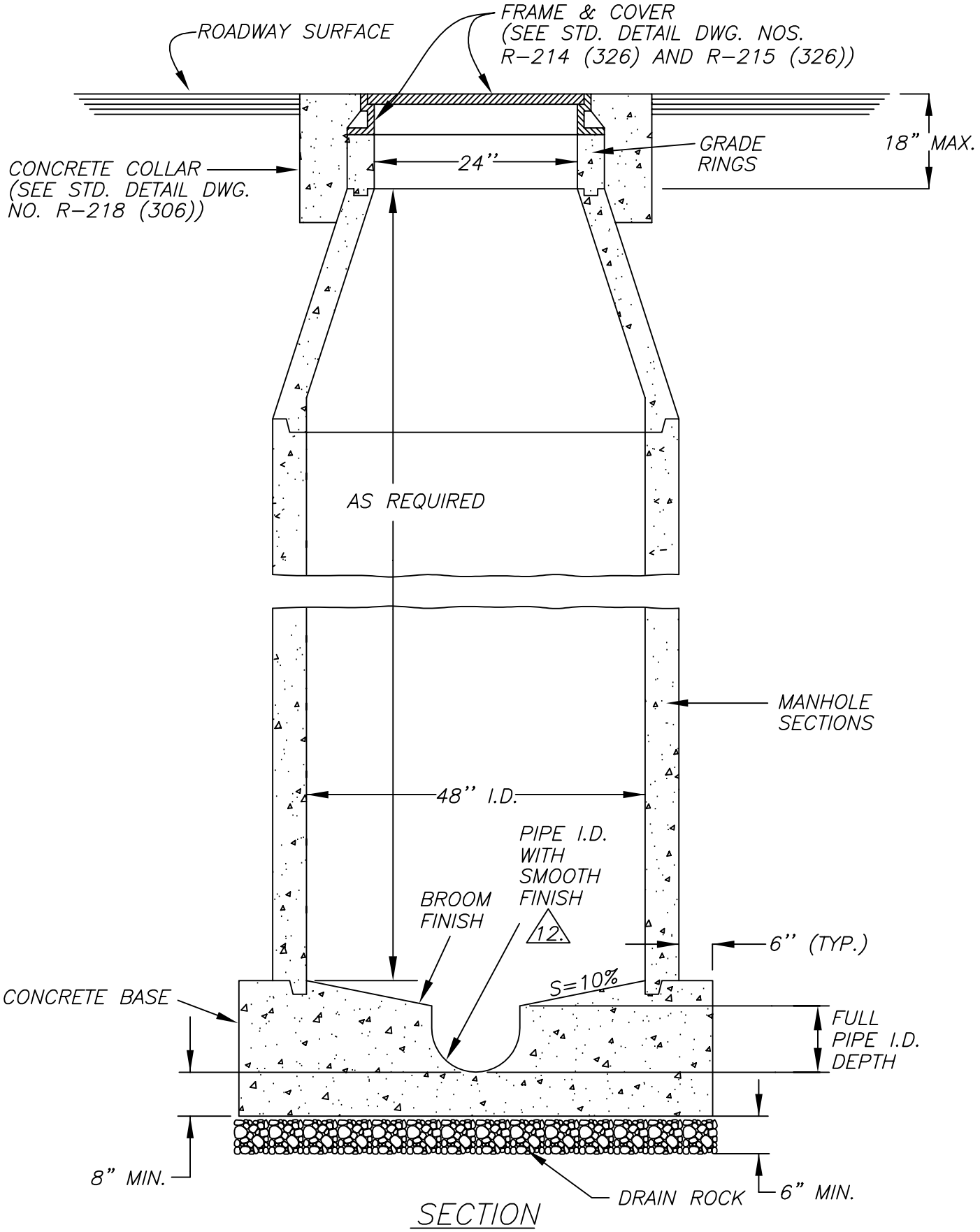

SECTION

NO.	REVISION	DATE	STANDARD DETAILS FOR PUBLIC WORKS CONSTRUCTION	SECTION RENO
			MANHOLE TYPE I	DRAWING NO. R-207A (306,311)
				DATE 08/00 / PAGE 207
APPROVED BY: S.V.		08/00		