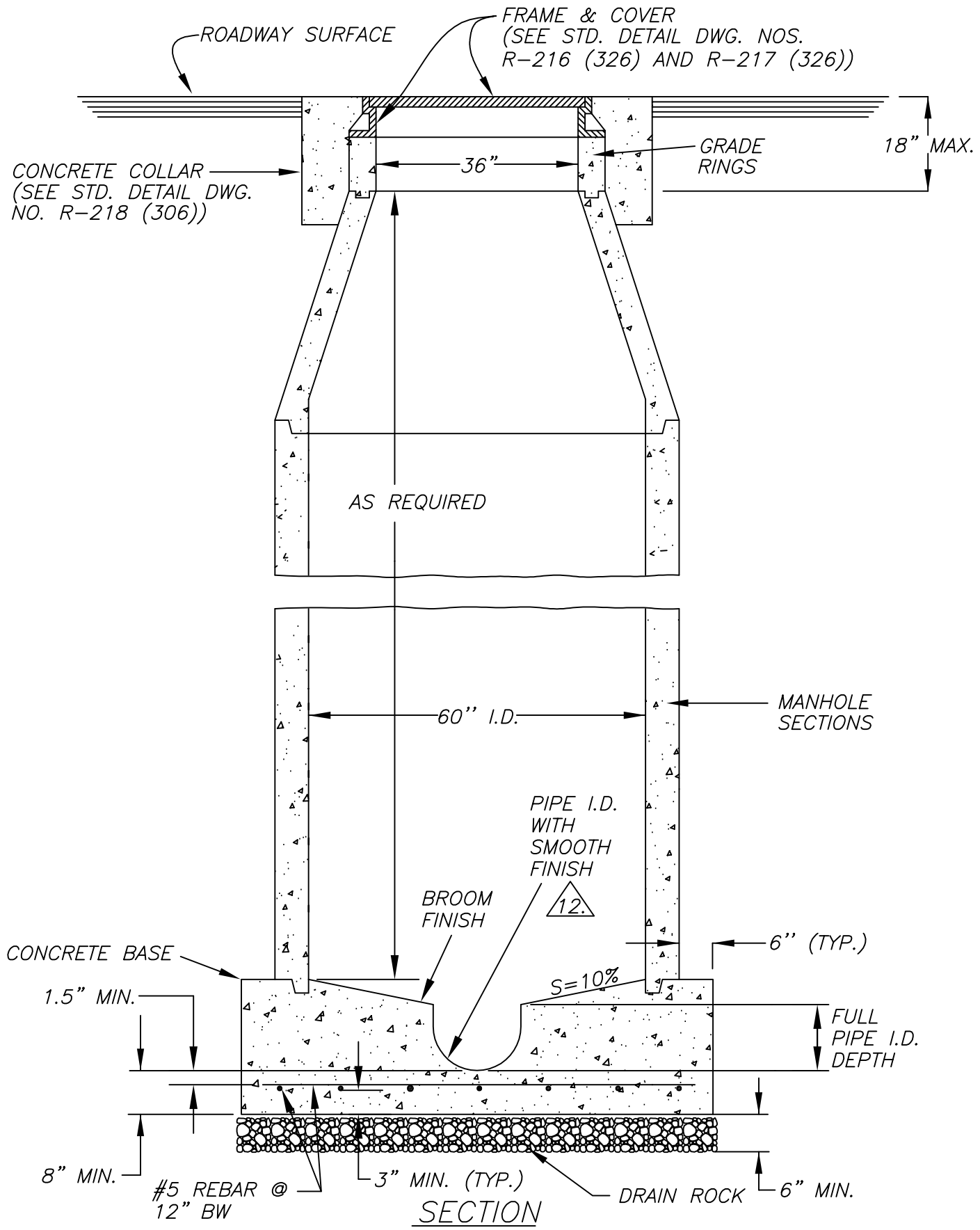

NO.	REVISION	DATE	STANDARD DETAILS FOR PUBLIC WORKS CONSTRUCTION	SECTION RENO
			MANHOLE TYPE V	DRAWING NO. R-209A (306,311)
				DATE 08/00 / PAGE 211
APPROVED BY : S.V.		08/00		