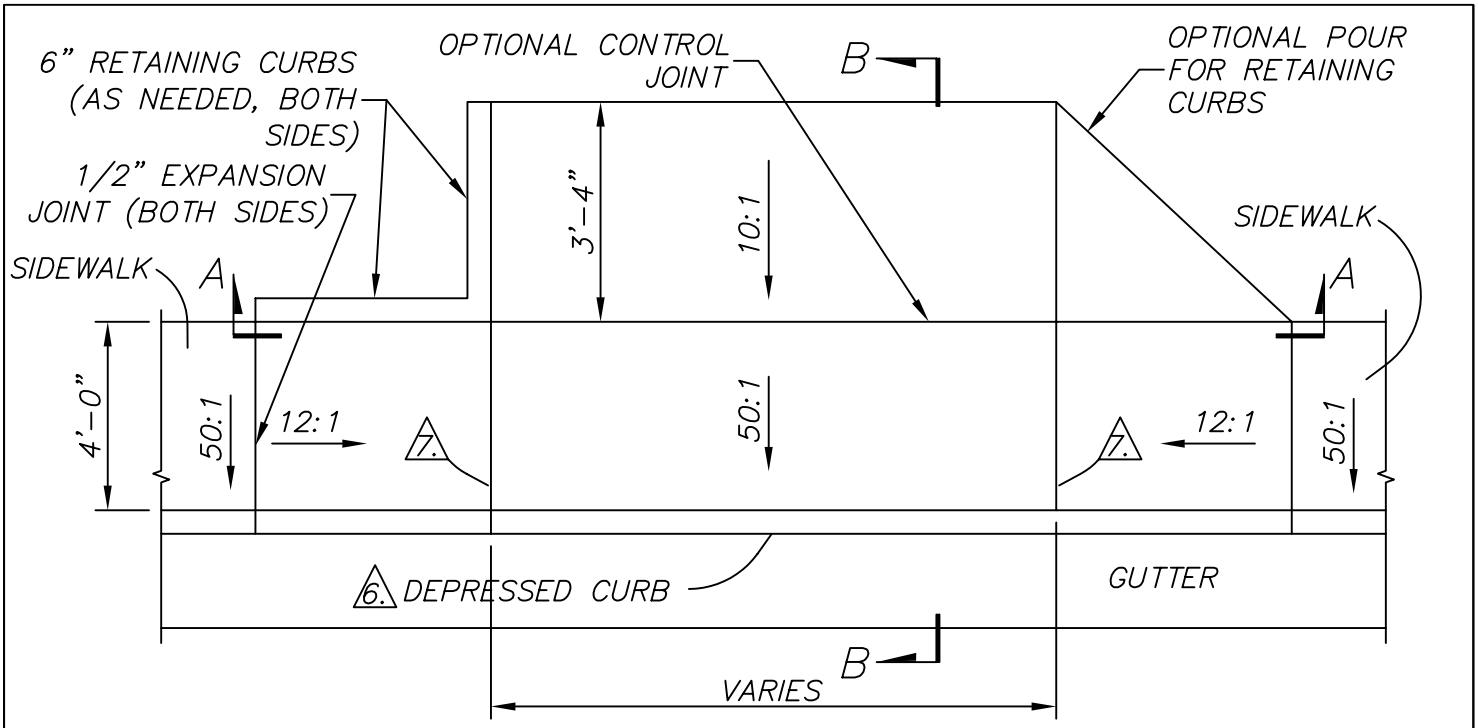

PLAN

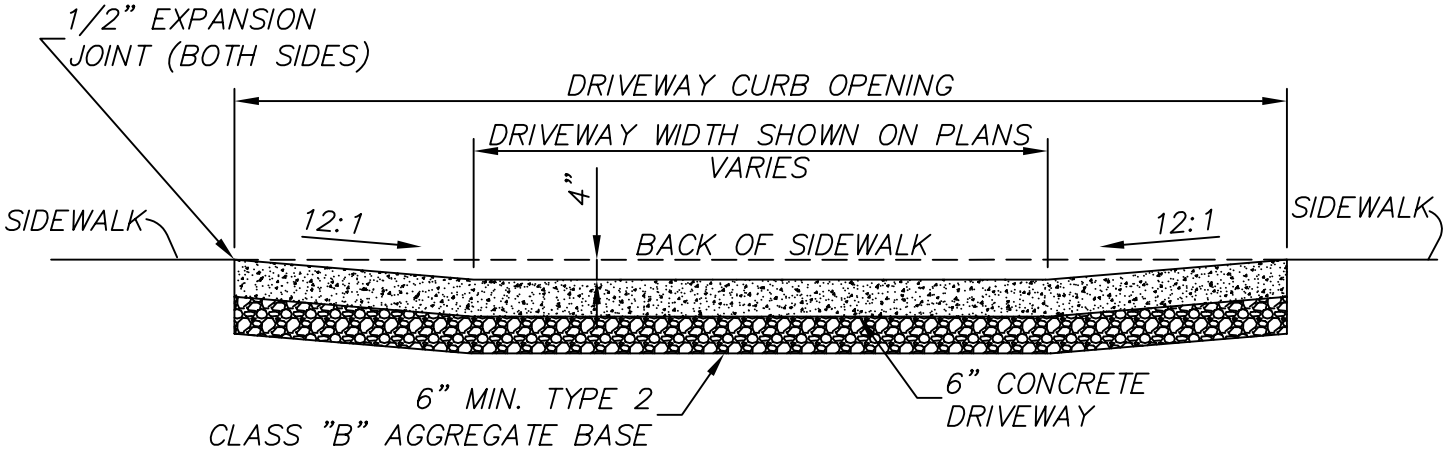

SECTION A–A

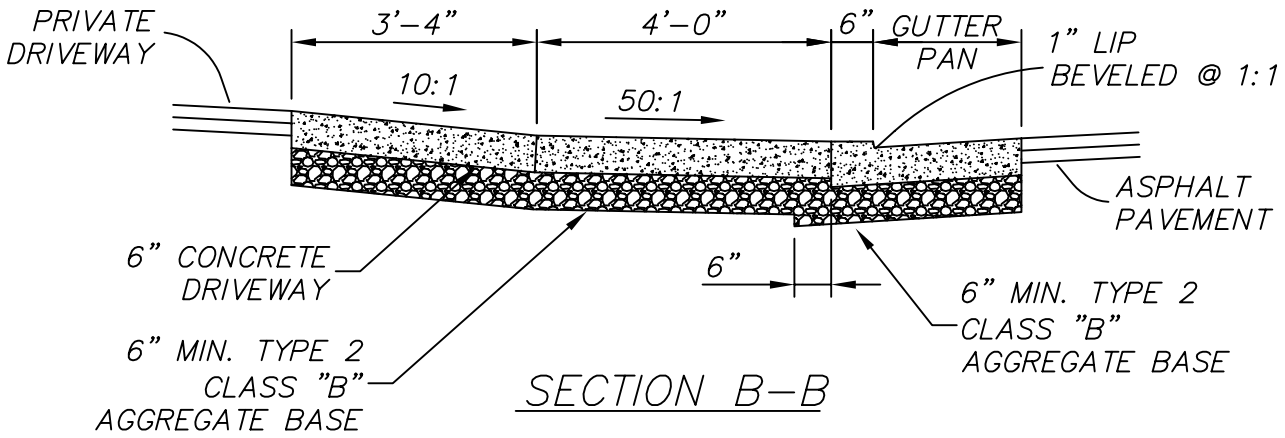

SECTION B–B

NO.	REVISION	DATE	STANDARD DETAILS FOR PUBLIC WORKS CONSTRUCTION	SECTION RENO	
1	NOTES 6 & 7	06/05	P.C.C. DRIVEWAY NEW DEVELOPMENT	DRAWING NO. R-114B (312)	
				DATE 01/04	PAGE 133
APPROVED BY:	G.S.	07/05			