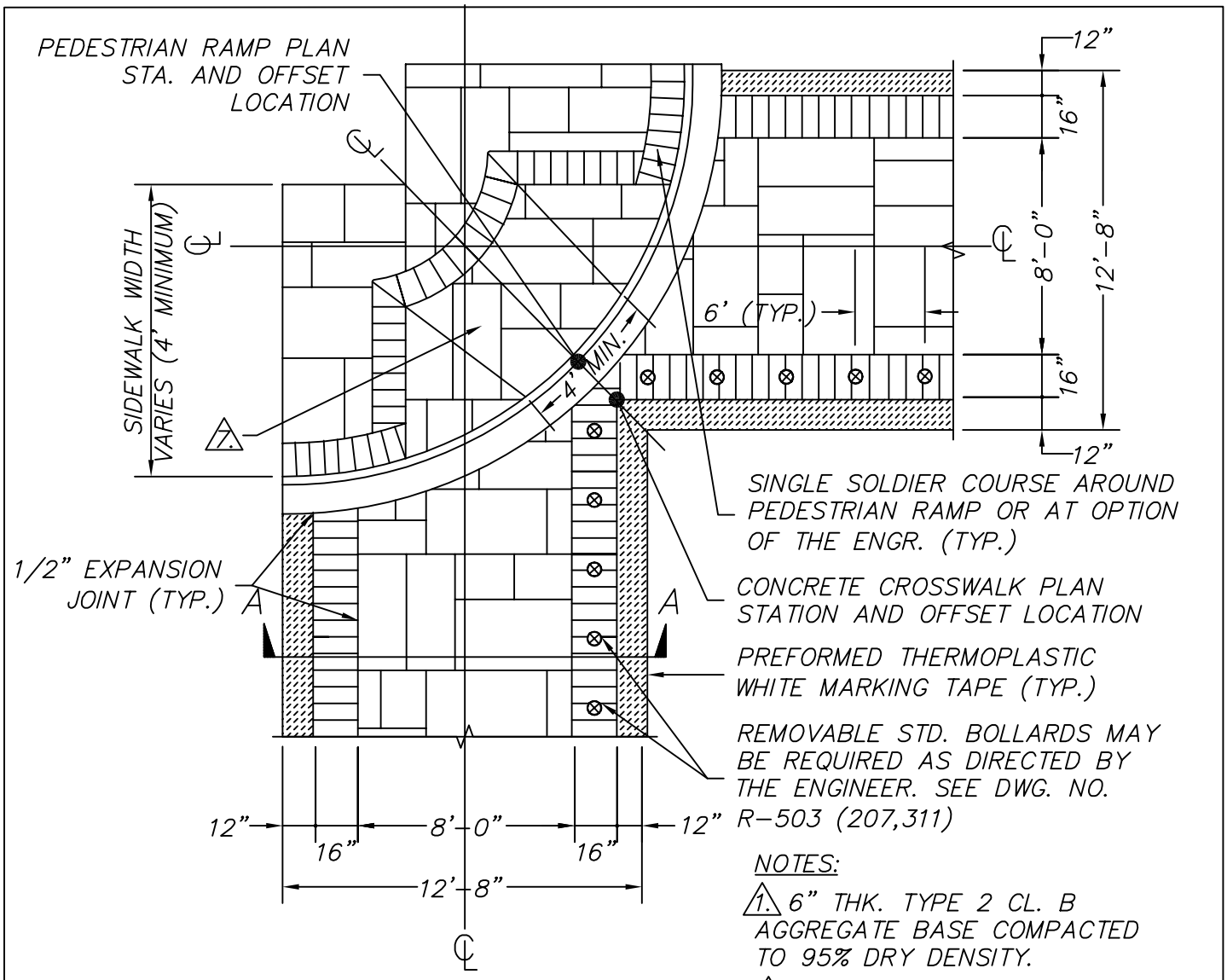

PLAN

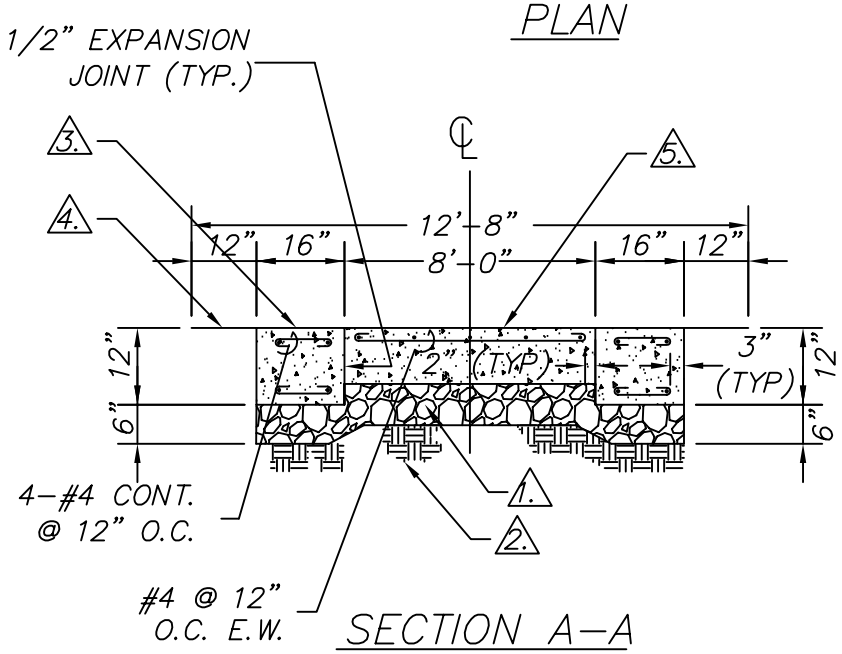

SECTION A-A

NOTES:

1. 6" THK. TYPE 2 CL. B AGGREGATE BASE COMPACTED TO 95% DRY DENSITY.

2. SUBGRADE PREPARED AND COMPACTED PER GEOTECHNICAL REPORT, 90% MIN. COMPACTION

3. STAMPED P.C. CONC. 4000 PSI, DOUBLE SOLDIER COURSE. COLORED CORAL RED

4. PREFORMED THERMOPLASTIC WHITE MARKING TAPE (TYP.)

5. 8" THK. STAMPED P.C. CONCRETE, COLORED FRENCH GRAY, 4000 P.S.I., ASHLAR STONE RANDOM PATTERN

6. CURB SHALL BE DEPRESSED AT FULL WIDTH OF PEDESTRIAN RAMP

7. REFER TO DRAWING NO. R-106D FOR PEDESTRIAN RAMP DETAILS

NO.	REVISION	DATE	STANDARD DETAILS FOR PUBLIC WORKS CONSTRUCTION	SECTION RENO	
1	DIFF. DRAWING	01/04	COLORED AND STAMPED P.C. CONCRETE CROSSWALK AND PEDESTRIAN RAMP	DRAWING NO. R-104C (312)	
				DATE 08-01	PAGE 106
APPROVED BY: G.S.		01/04			