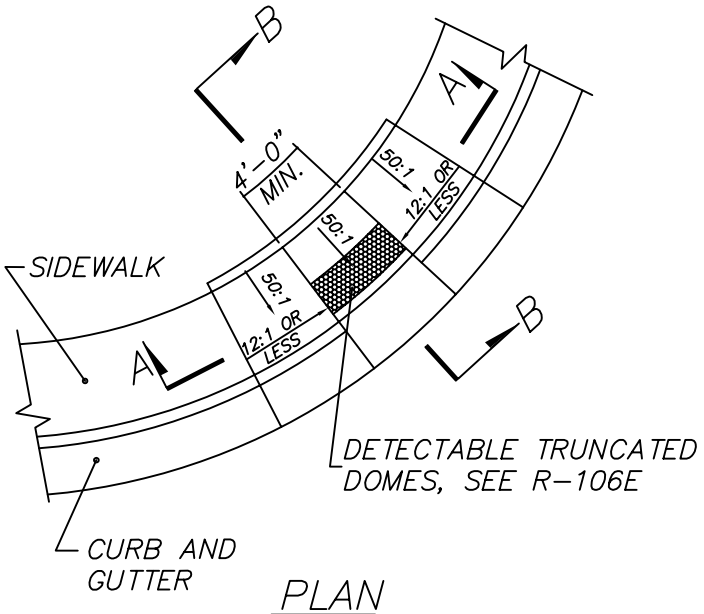

PLAN

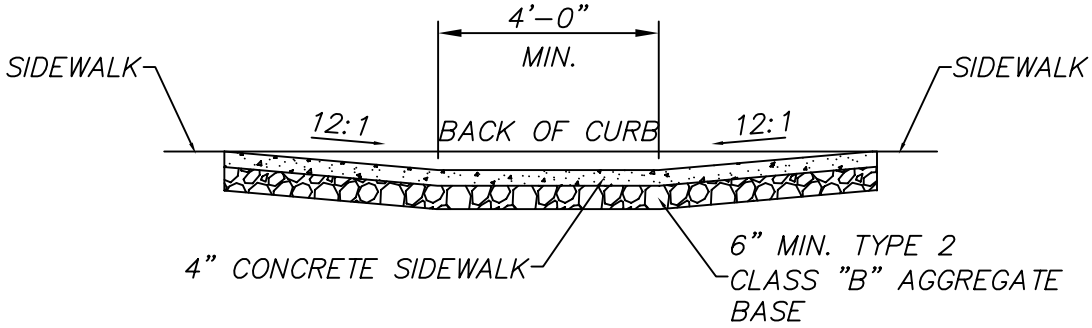

SECTION A-A

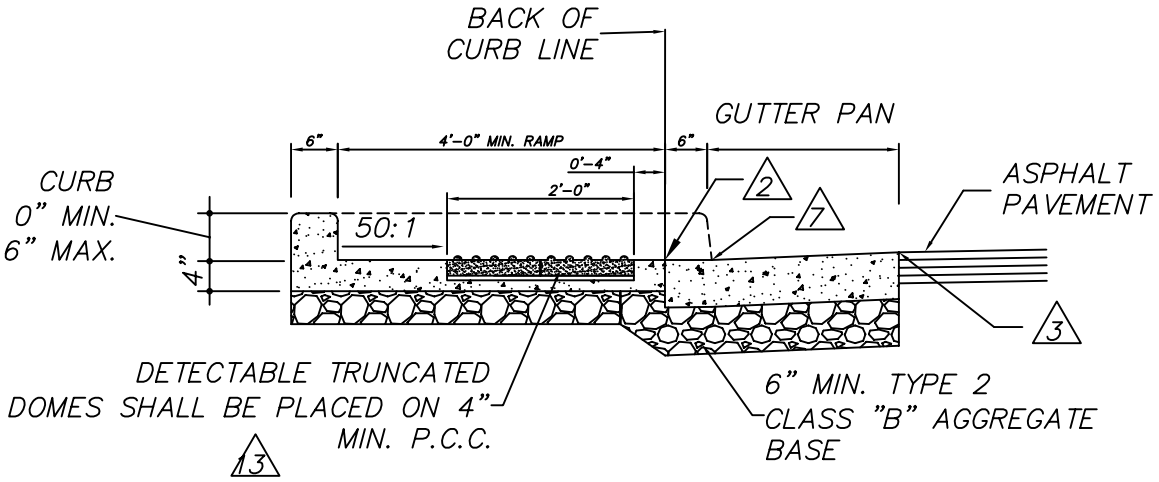

SECTION B-B

NO.	REVISION	DATE	STANDARD DETAILS FOR PUBLIC WORKS CONSTRUCTION	SECTION RENO	
1	ADA REQ'T.	01/04	PEDESTRIAN RAMP EXISTING SIDEWALKS	DRAWING NO. R-106A (312)	
2	REDRAW	07/05			
				DATE 08/00	PAGE 118
APPROVED BY: G.S.		07/05			