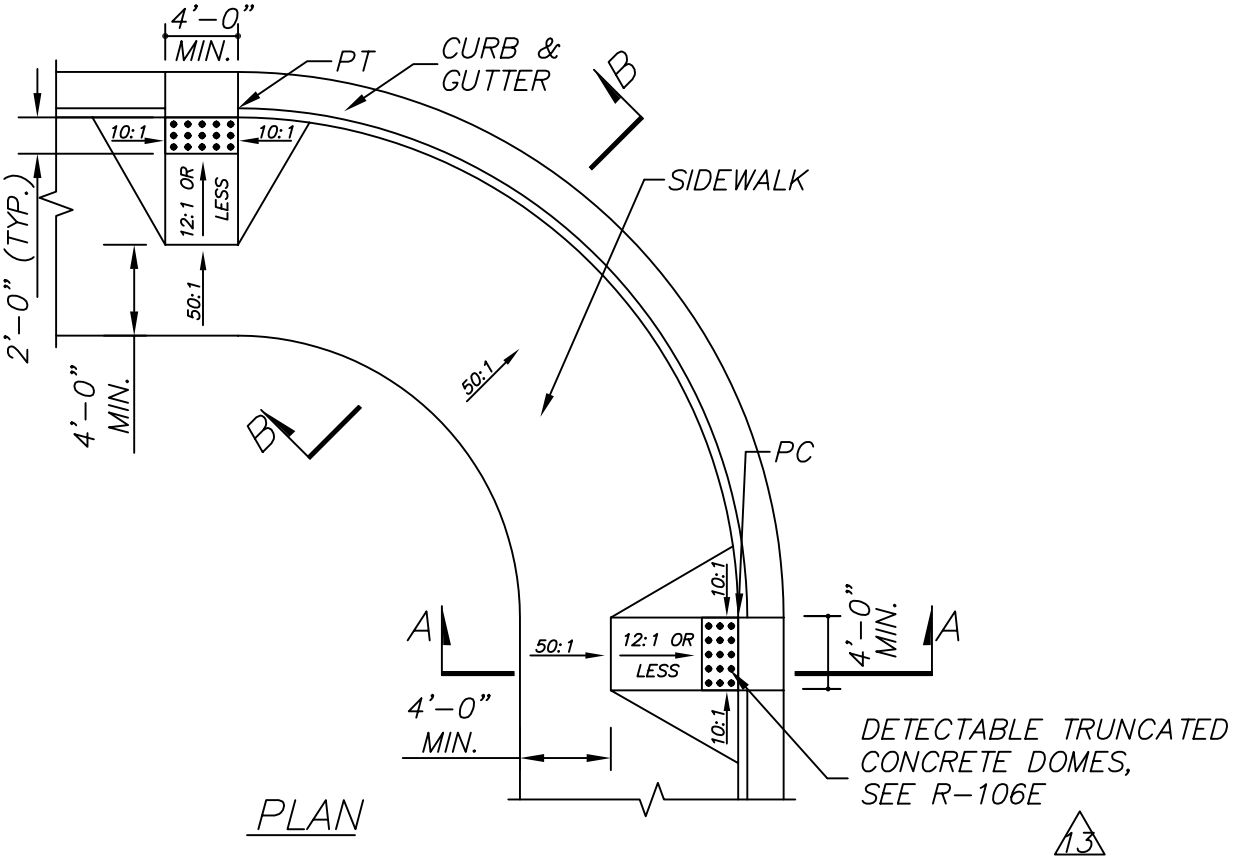

PLAN

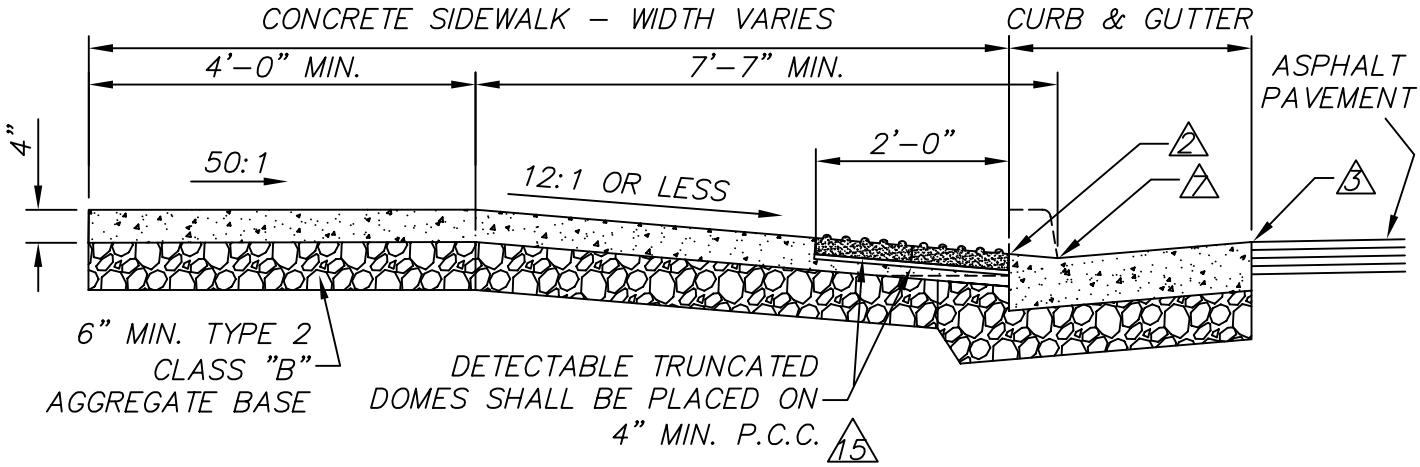

SECTION A-A

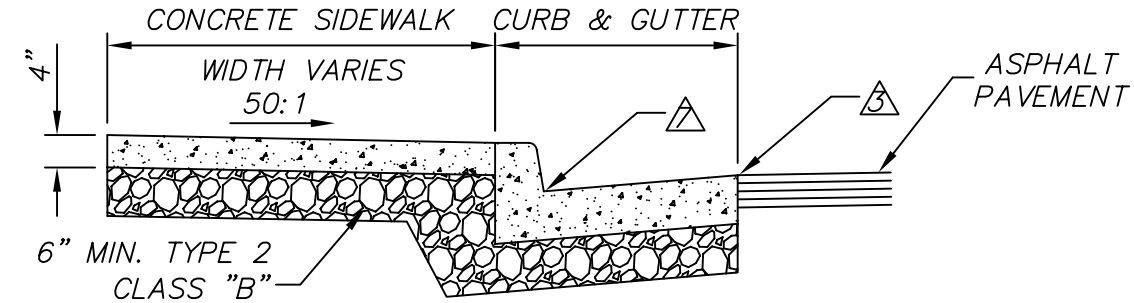

SECTION B-B

NO.	REVISION	DATE	STANDARD DETAILS FOR PUBLIC WORKS CONSTRUCTION	SECTION RENO
1	BASE	07/05	PEDESTRIAN RAMP WIDE SIDEWALKS	DRAWING NO. R-106C (312)
				DATE 01/04 / PAGE 120
APPROVED BY: G.S.		07/05		