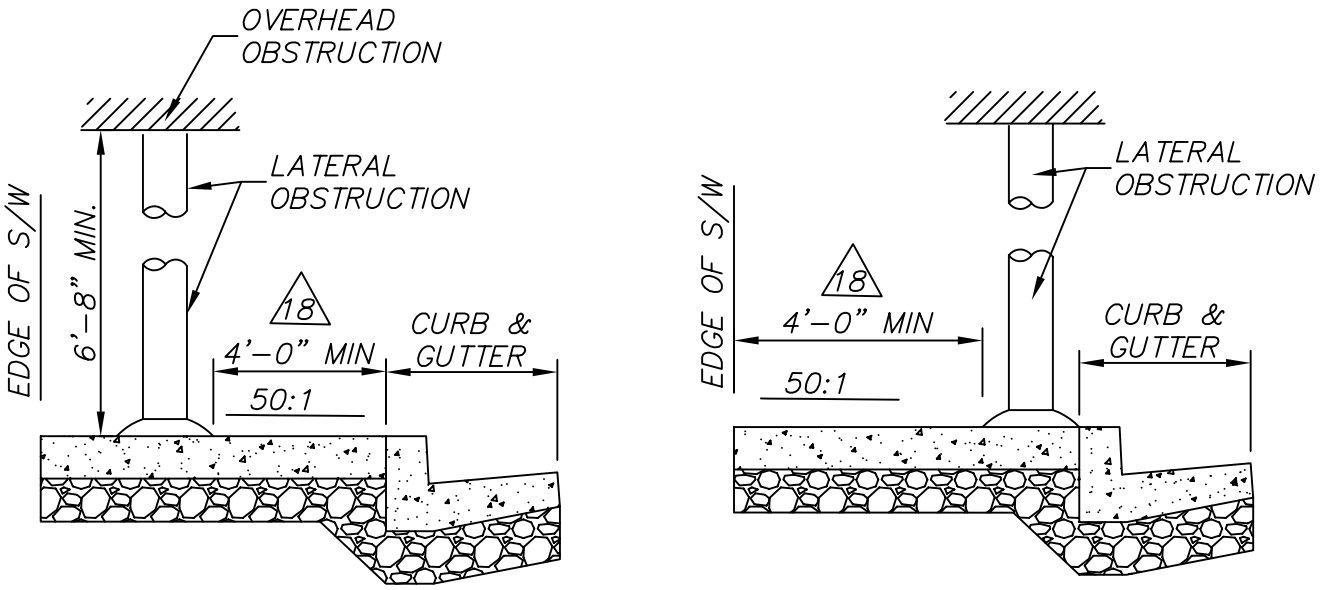

TYPICAL SIDEWALK vs OBSTRUCTION CLEARANCE DETAIL

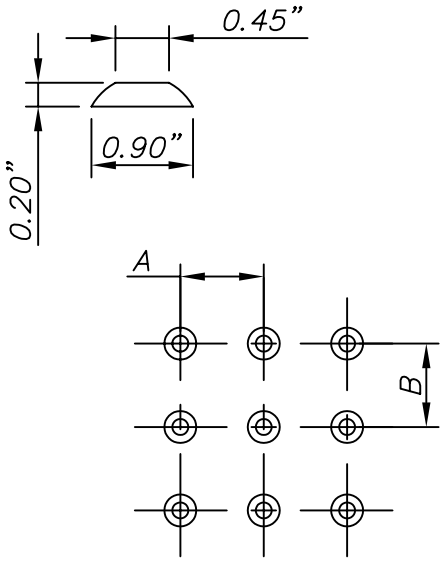

DOME PLACEMENT

A = 1.6" – 2.4"
B = 1.6" – 2.4"

TRUNCATED DOMES DETAIL

NO.	REVISION	DATE	STANDARD DETAILS FOR PUBLIC WORKS CONSTRUCTION	SECTION RENO	
1	PAVER DETAIL	07/05	PEDESTRIAN RAMP DETAILS	DRAWING NO. R-106E (312)	
APPROVED BY: G.S.		07/05		DATE 01/04	PAGE 122